BRAC UNIVERSITY
CSE460- VLSI DESIGN
Spring '26
Section: 10 Assignment: 01

File name: ID_Name.pdf

Question-1: Sketch a transistor-level schematic for a compound CMOS logic gate for each of the following functions:

a) Y = (A . B . C + D)'

b) Y = ((A . B + C) . D)'

c) Y = (A . B + C . (A + B))'

Question-2: A classroom has three temperature sensors to control the temperature of the room by controlling the air conditioner installed in that room. The temperature sensors produce a high output if the temperature crosses a certain threshold. The air conditioner turns on if the outputs of all three sensors are high, otherwise it remains off.

a) Identify the logic circuit required to implement the system mentioned above and implement the circuit using 2:1 mux.
b) Draw the circuit using transmission gates.

Question-3: For the given timing diagram,

a) Synthesize the function F(A,B,C).
b) Draw the circuit using CMOS logic.
c) Implement the circuit using a 4:1 MUX.

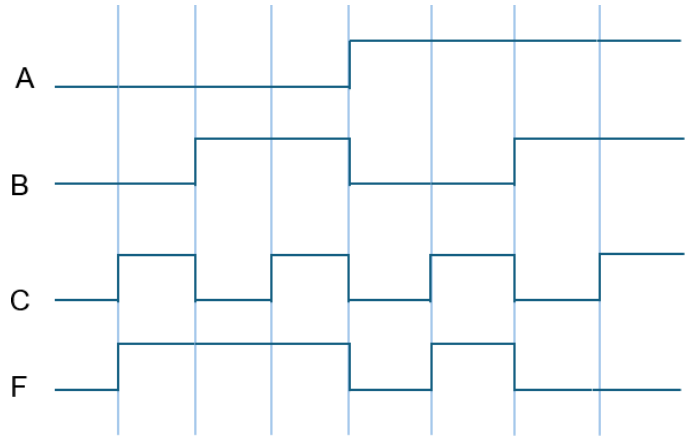

Question-4: Explain restoring and non-restoring properties of a device with the help of different kinds of CMOS tristate devices.

Question-5: From the following figure, find the value of the voltages at points X and Y if VSS = 0 V and Vtp = - 0.3 V. Why do X and Y differ?

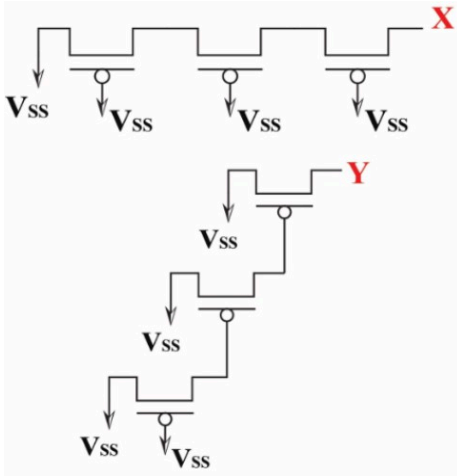

Question-6: From the following figure, find the voltages at each of the nodes, A, B, C, D, E. Assume, Vdd = 1 V, Gnd = 0V, Vtn = 0.2 Vand |Vtp| = 0.2 V.

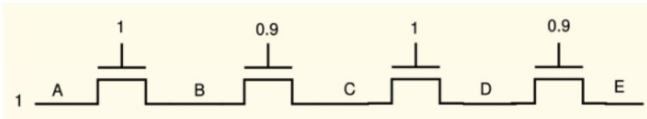

Question-7: From the following figure, find the voltages at each of the nodes, A, B, C, D, E and F. Assume, Vdd = 5 V, Gnd = 0V, Vtn = 0.5 Vand |Vtp| = 1.5 V.

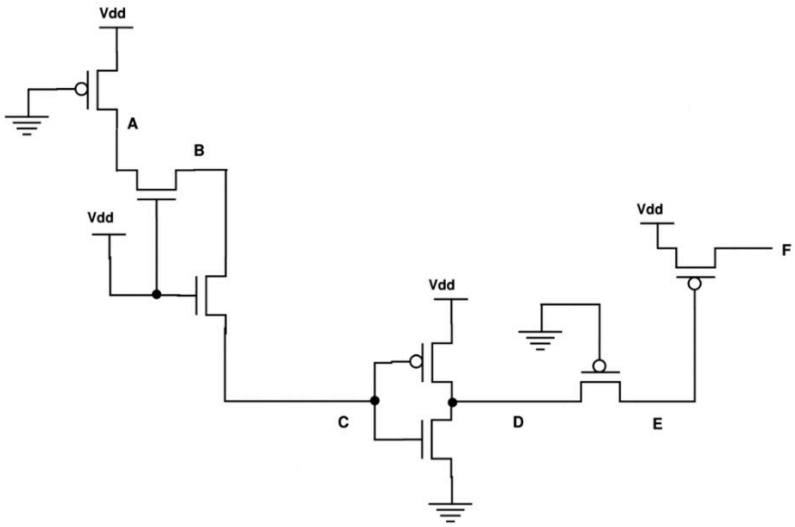
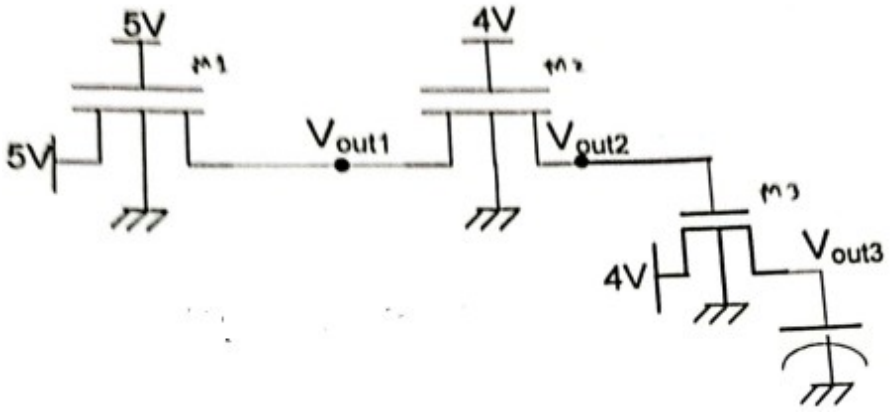
Question-8: From the following figure, find the voltages Vout1, Vout2 and Vout3. Assume, Vtn = 0.5 Vand |Vtp| = 1.5 V.